Product data sheet

Atlanta

duraplus®

1530/3623N

Article number	2863993
EAN-Code	4012789243840
Country of origin	Italy
CN-Code	83024110
Grade	2
Corrosion resistance	3
Door thickness	42-51 mm
Spindle size	8 mm
Spindle size privacy	
Spindle length	
(Key)Hole size	Euro profile cylinder
Key hole distance	92 mm
Finish	F1 aluminium silver effect
Range	Core Product Range
Packing unit	15
Outer carton	15

HOPPE aluminium handle set on narrow backplate for profile doors:

- Tested to **DIN EN 1906: 26-0130A**
- Bearing: fixed/movable handles, spring cassettes, maintenance-free slide bearing
- Connection: HOPPE solid spindle
- Backplates: with supporting lugs
- Fixing: visible inside, bolt-through, M5 thread screws

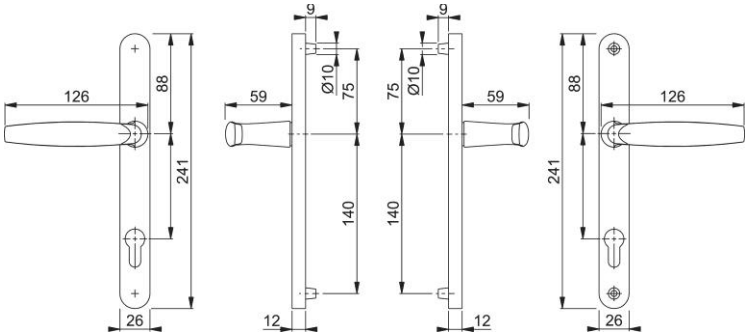

© HOPPE (UK) Ltd, All rights reserved. 6/19/2024

HOPPE (UK) · Ltd Gailey Park · Gravelly Way · Standeford · Wolverhampton WV10 7GW
Tel. 01902 484 400 · Tel. Sales Direct: 01902 484 410/20 · Fax 01902 484 406 · Fax Sales Direct: 01902 484 417/27 · info.uk@hoppe.com · www.hoppe.com